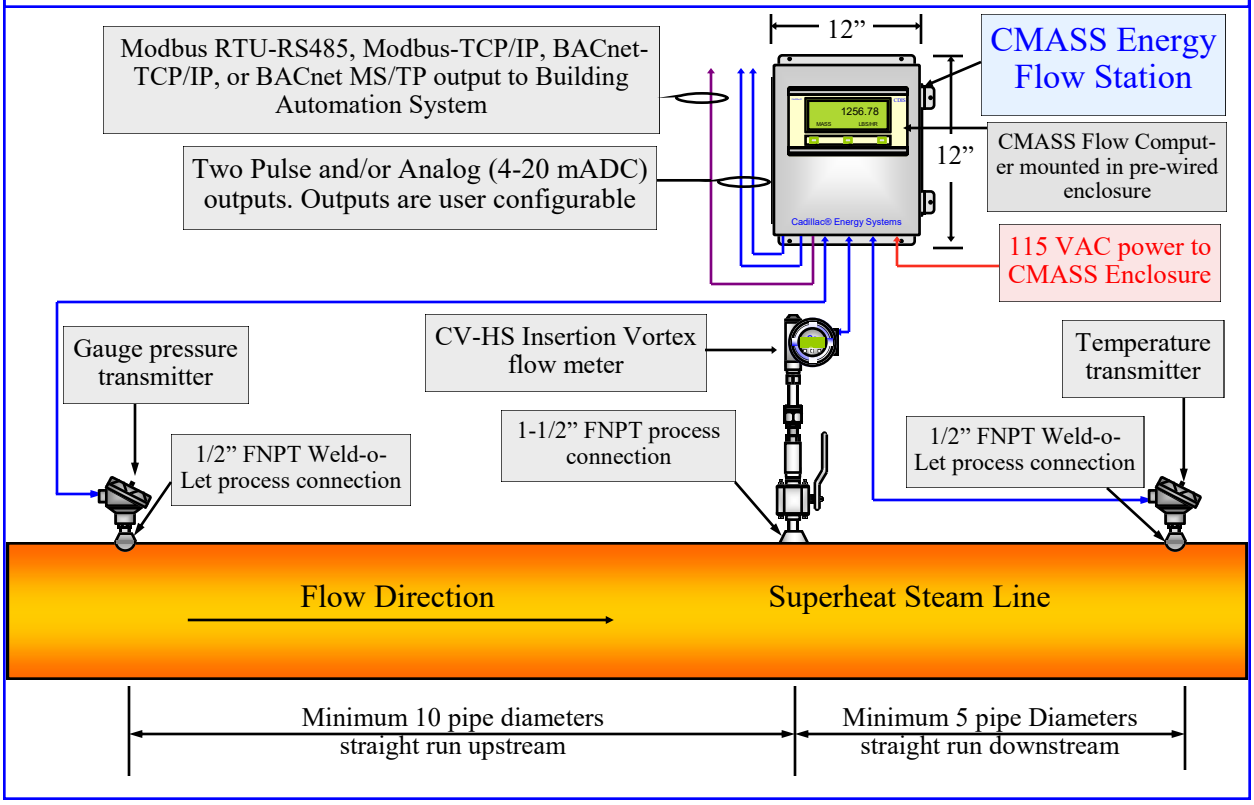CV-HS-HT Vortex installed in Superheat Steam Application